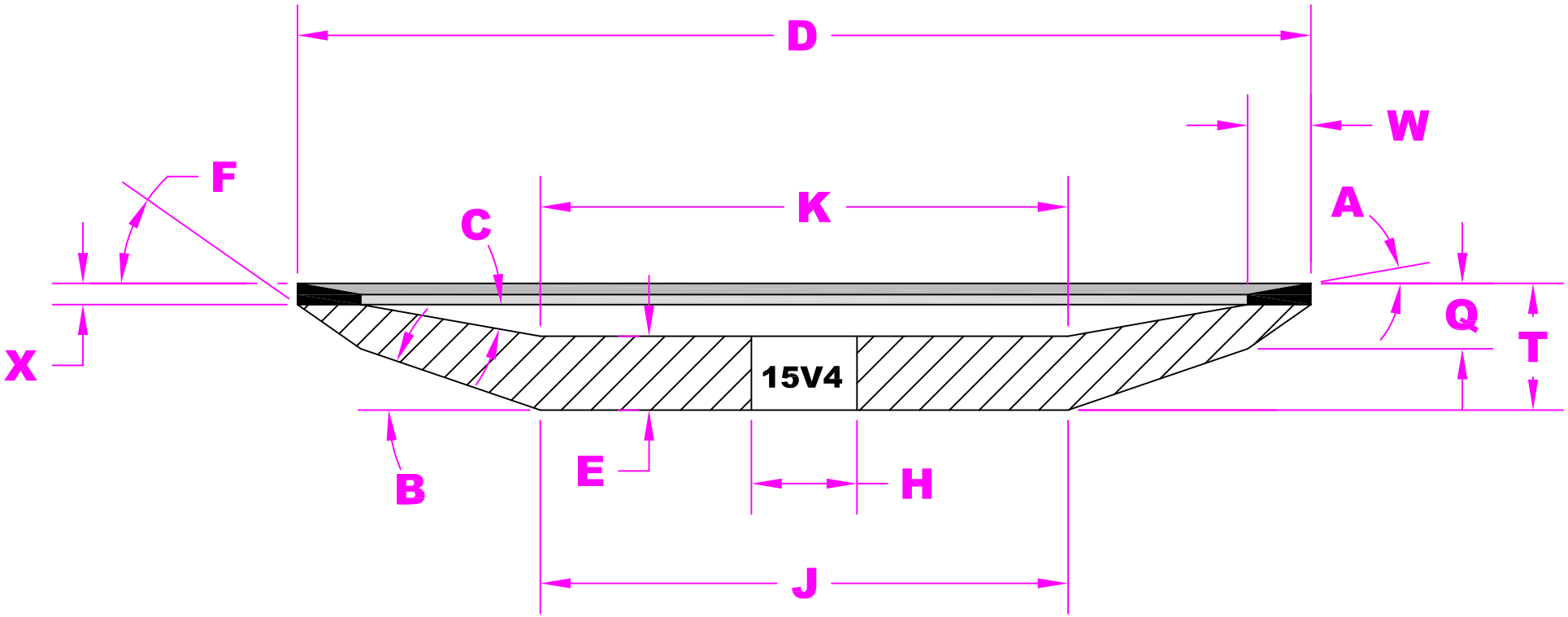
D
W
F
K
A
C
Q
T
X
15V4
B
E
H
J